HONGXUNJIE

Only suitable for children aged 14 and above.

Manual for Remote Control Racing Yacht

(Product model: HJ826A HJ826B HJ828A HJ828B)



★ Please read the product manual carefully before use. The pictures in the manual may differ from the actual product, and the actual product shall prevail.

Product parameter	Length	Width	Height	Frequency	Control distance	High speed driver time	Low speed driver time	Max speed	Battery required in the yacht	Battery required in the transmitter
	320mm	95mm	80mm	2.4G	≈80m	≈15min	≈60min	≈25km/h	7.4V Lithium battery	1.5V AA×2 (not included)

Product features

1. The speedboat is equipped with 2.4G automatic frequency matching technology, which has strong anti-interference ability and can enable multiple people to play at the same time.
2. The speedboat is equipped with colorful lights, making it quickly the focus of viewing, and it can also play freely with clear directions at night.
3. The speedboat is equipped with a flip function. If the speedboat accidentally capsizes during navigation, it can be quickly flipped back to its original position through the remote control to ensure normal navigation.

4. The speedboat is equipped with a low voltage protection function. When the battery level is low during operation, the speedboat lights and the green remote-control light flash quickly. The protection limits the speed and temporarily returns the throttle to its neutral position. Release the throttle, then pull it again to guide the speedboat back to shore at reduced speed.

5. The speedboat is equipped with a sleep function. When the speedboat is powered on, if it does not receive a remote control signal for 30 consecutive minutes, it will enter the sleep state to protect the battery and prevent it from being damaged.
6. The speedboat is equipped with a 180 strong magnetic motor, which provides even stronger power and can reach a maximum speed of 25km/h.
7. The speedboat is equipped with a 7.4V lithium rechargeable battery, which has a large capacity, high rate, and longer endurance.
8. The remote control is equipped with steering adjustment to ensure fast and convenient adjustment of the speedboat's straight-line travel.
9. The remote control is equipped with a high and low speed switching function, making it easy for beginners to play.
10. The remote control is equipped with a power prompt function. When the red light of the remote control flashes slowly, it means that the remote control has insufficient power. Please replace the battery in a timely manner.
11. The remote control is equipped with an ultra long distance reminder function. When the speedboat exceeds the controllable signal range or is disturbed by environmental signals, the green light on the remote control will flash slowly to indicate, ensuring that the speedboat is sailing within the effective control range.
12. The remote control is equipped with lighting control function, allowing for flexible switching of multiple lighting states.

Packing list

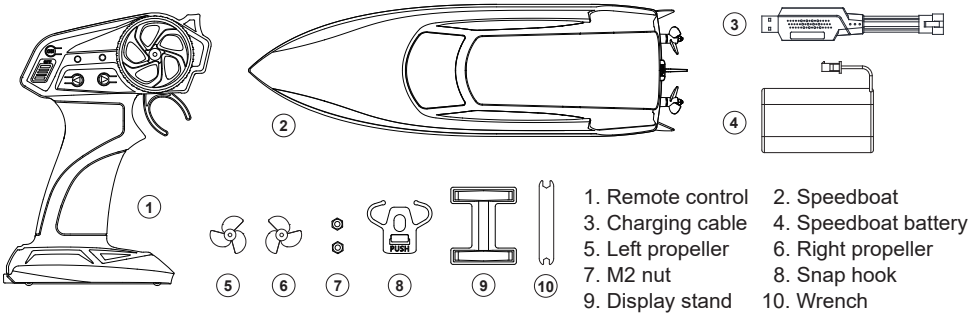

1. Remote control
2. Speedboat
3. Charging cable
4. Speedboat battery
5. Left propeller
6. Right propeller
7. M2 nut
8. Snap hook
9. Display stand
10. Wrench

Product Plan Illustration

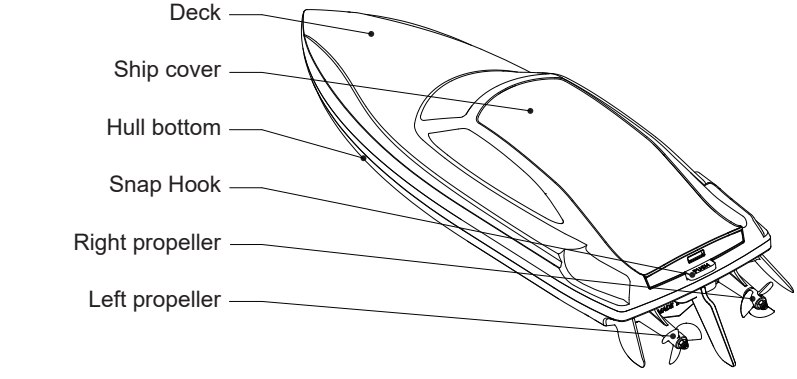

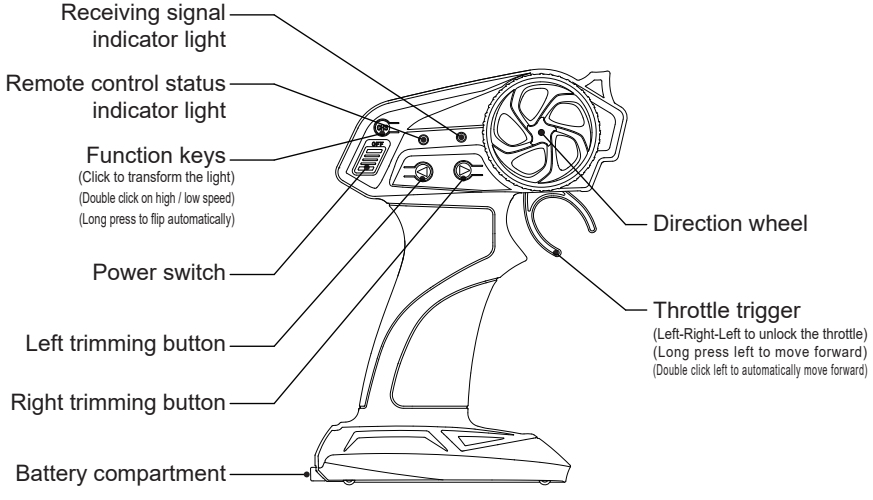

Preparation before playing the racing yacht

1. As shown in Figure 1, use your thumb to press the battery cover latch backwards as indicated by arrow 1, and apply force upwards as indicated by arrow 2 to open the battery cover.
2. Insert the positive and negative terminals of the battery into the battery compartment in the direction shown in Figure 2, then cover the battery cover.

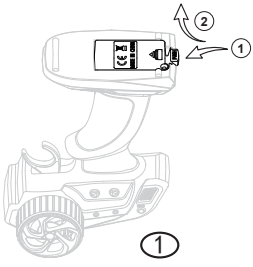

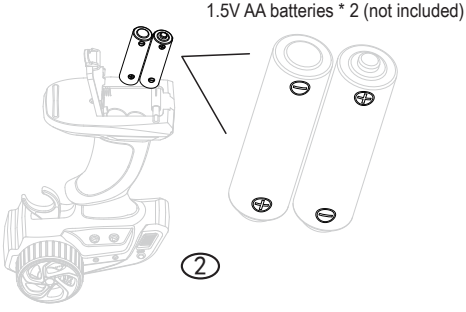

Charging of Power battery

Insert the lithium rechargeable battery configured for the product into a USB charger (compatible with the buckle and slot), and then plug the USB charger into the built-in 5V charger adapter or a powered on computer USB port. At this time, a red light in the USB will light up to indicate that the battery is charging (charging time is about 2 hours), and a red light off to indicate that the charging is complete. Please disconnect all connections

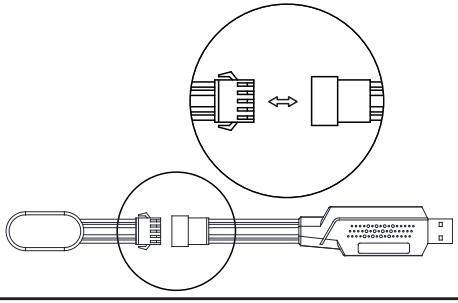

Attention

★Only the charger provided with the product can be used to charge the product.
★During charging, personnel are not allowed to leave.
★If the battery is found to be hot during the charging process, please stop charging immediately.
★When not charging, please disconnect the charger from the battery plug and disconnect the power supply.
★If there is any odor or sudden heating, deformation, discoloration or other abnormal phenomenon during the use or charging process of the battery, please stop using the battery immediately.
★After driving, the battery temperature is high. It is recommended to wait for 30 minutes before charging the battery, which can effectively extend its lifespan.
★Before storing the battery, it needs to be fully charged before storage to avoid damage caused by over discharge of the battery.
★If you are unsure about the charging process, please contact our company or dealer.

Warning

★It is prohibited to disassemble or reassemble the battery.
★It is prohibited to impact or throw batteries.
★Short circuiting of batteries is prohibited.
★Do not charge near fire or under sunlight.
★It is prohibited to throw batteries into water.
★It is prohibited to use batteries that are damaged or severely deformed.
★Direct contact with leaking batteries is prohibited.
★It is prohibited to insert sharp objects into the battery or damage it in other ways.
★Follow the charging requirements and use the designated charger to charge the battery.

Preparations before playing the racing yacht

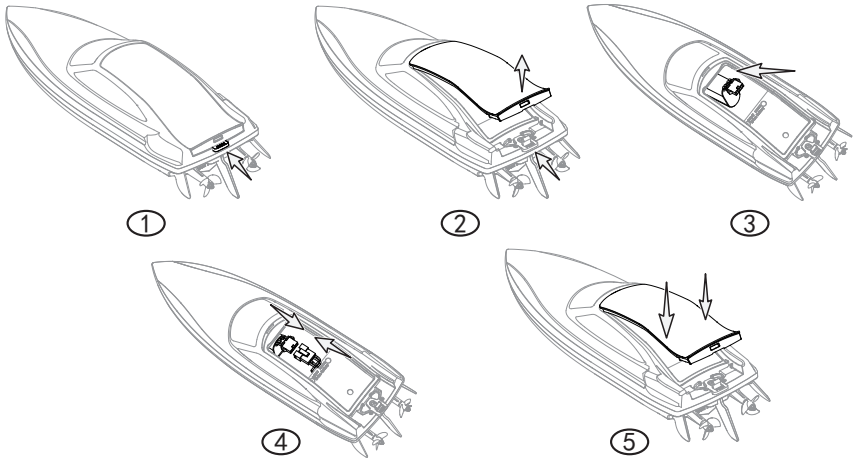

1. As shown in Figure 1, press the snap hook without loosening it. As shown in Figure 2, snap the rear edge of the upper cover and lift it up.
2. As shown in Figures 3 and 4, insert the fully charged battery into the speedboat, connect the red positive and black negative wires to the plug inside the speedboat, and the speedboat lights will flash and wait for frequency matching. (The battery plug is designed to prevent reverse insertion. If it cannot be inserted smoothly, please change the direction of insertion)
3. As shown in Figure 5, insert the front end of the upper cover into the ship's compartment, press down on the upper cover to fasten it to the snap hook, and check that the upper cover is level with the edge of the speedboat.
4. Place the speedboat on the display rack, turn on the power switch of the remote control, turn on the remote control, and automatically synchronize with the speedboat. The speedboat lights are always on, and the red and green lights of the remote control are always on, indicating that the speedboat has successfully synchronized with the remote control. At this time, you can put the speedboat into the water, To operate the remote control: move the throttle left, then right, then left to deactivate the motor protection. After that, you can control the speedboat for use.
5. When multiple speedboats are playing at the same time, one speedboat and one remote control must be turned on to match the frequency before turning on another speedboat and remote control to match the frequency.
   Do not turn on multiple speedboats and remote controls at the same time to avoid frequency interference.
6. If there is a frequency crossover phenomenon and the speedboat cannot be controlled, simply power off the speedboat and remote control, plug in the speedboat battery again, turn on the power switch of the remote control, and restart for frequency matching.

Attention

1. This product is only suitable for people aged 14 and above to play with.
2. Do not play on water surfaces with a lot of weeds and debris, as debris in the water may entangle the propeller of the speedboat and cause it to stop sailing.
3. It is prohibited to navigate in swimming pools or on water surfaces where people are swimming to avoid injury.
4. Please be careful not to exceed the remote control range when playing with the speedboat to avoid losing control.
5. Fast boats should not sail in saltwater to avoid damaging the parts of the boat.
6. For the first time playing, a slight amount of smoke inside the speedboat is a normal phenomenon, and it will gradually disappear after playing for a few cycles.

Tips: **After driving, first take the boat out from water, then close the power switch of remote controller, or the boat will lose control for other signal disturb.**

Operation:

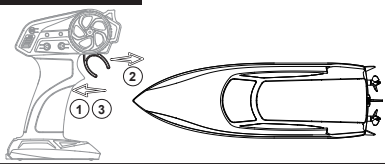

Throttle Protection： When the speedboat is powered on, the motor remains in a locked state and cannot operate-to prevent potential injury. The motor can only be controlled after the protection is deactivated.
Protection Deactivation: move the remote control joystick in the sequence Left → Right → Left. the speedboat's lights will flash rapidly for 2 seconds -this indicates that the throttle protection has been released.

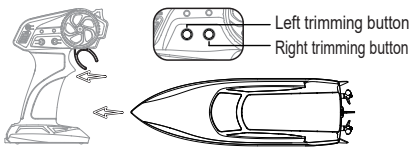

Manual forward: Pull the trigger to the left and the speedboat will move forward in a straight line.
Automatic forward: Quickly pull the trigger twice to the left, then release the trigger and turn the directional wheel to control the direction of the speedboat. Pull the trigger again to release automatic forward movement.
Fine tuning: When only pulling the trigger, if the speedboat cannot travel in a straight line, it will deviate to the left. Please click the right fine tuning button to correct the straight direction to the right. If it deviates to the right, click the left fine tuning button. Click the fine tuning button multiple times until the speedboat travels in a straight line.

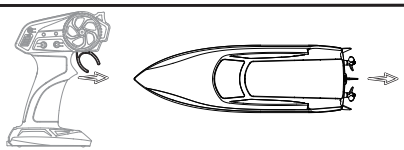

Backward: Push the trigger to the right, and the speedboat will move backwards.

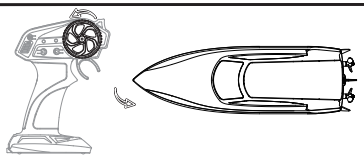

Left turn in place: Turn the steering wheel to the left, and the speedboat will turn left in place.

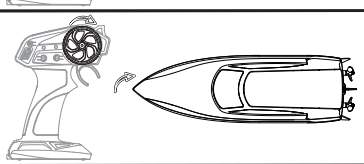

Turn right in place: Turn the steering wheel to the right, and the speedboat will turn right in place.

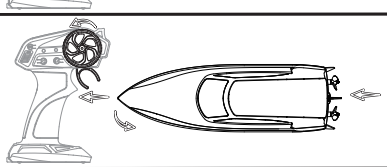

Left turn: Pull the throttle trigger to the left, and the speedboat will move forward. At this point, turn the wheel in the left direction again, and the speedboat will turn left and move forward.

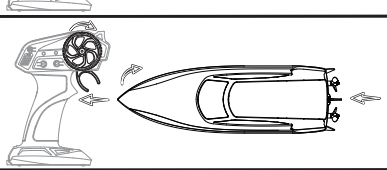

Right turn: Pull the throttle trigger to the left, and the speedboat will move forward. At this point, turn the wheel in the right direction again, and the speedboat will turn and move forward to the right.

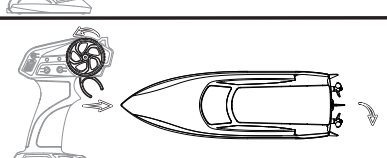

Left Backward: Push the throttle trigger to the right, and the speedboat will reverse backwards. At this point, turn the wheel in the left direction again, and the speedboat will turn backwards to the left.

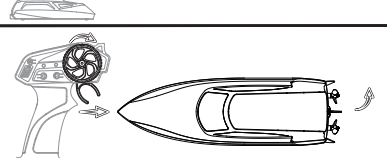

Right Backward: Push the throttle trigger to the right, and the speedboat will reverse backwards. At this point, turn the wheel in the right direction again, and the speedboat will turn backwards to the right.

Function keys

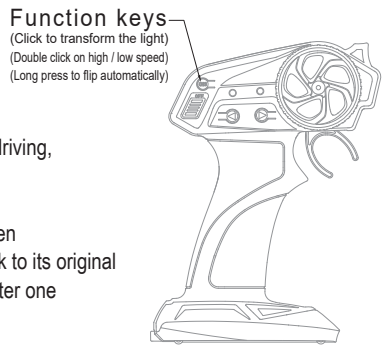

1. **Click on the function button:** Fast boat light transformation, click to cycle through the lights.
2. **Double click the function button:** the speedboat switches to medium speed driving, double-click the button again to switch to low-speed driving, double-click the button again to switch to high-speed driving, double-click to cycle speed switching.
3. **Long press the function button:** When the speedboat cannot be driven due to flipping over, long press this button to automatically flip it back to its original position. If the speedboat does not flip back to its original position after one long press, you can try long pressing this button multiple times.

Safety precautions

Please do not touch the propeller when it is rotating, it will cause injury.



Replace propeller

If the propeller is damaged and needs to be replaced, turn off the power to the speedboat, unplug the battery, hold the speedboat with one hand, pull out the damaged propeller with the other hand, replace the corresponding new propeller on the left (Inscription L) or right(Inscription R) side, and push in the motor shaft.

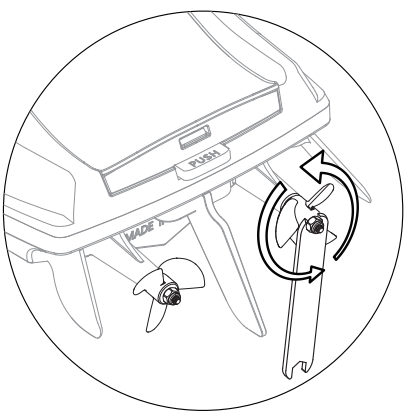

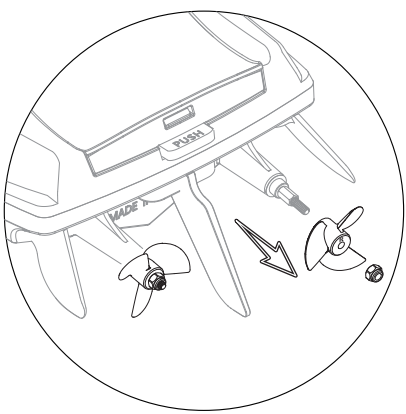

Maintenance methods

1. The surface of the product should be protected from prolonged exposure to sunlight, and oil stains should be cleaned with neutral cleaning agents and water.
2. Before storage, please clean the speedboat after playing to ensure that there is no moisture inside and no stains on the appearance of this product.
3. Before storage, the lithium battery must be removed from the speedboat and fully charged for storage.
4. Before storage, please remove the battery from the remote control to avoid battery leakage and damage to the remote control.

Low voltage protection

Low voltage protection prompt for speedboats:

When the battery level of the speedboat is low, low-voltage protection is activated. The speedboat lights and the green remote-control light flash quickly; available power and speed are limited. Release the remote-control throttle so it returns to neutral, then pull the throttle again to guide the speedboat back to shore at reduced speed. Return to shore immediately to avoid running out of power on the water.

Speedboat hibernation function:

When the speedboat is powered on, if it does not receive a remote control signal for 30 consecutive minutes, it will automatically enter sleep mode. After entering sleep mode, the lights of the fast boat will turn off. At this point, the fast boat cannot be controlled with the remote control anymore. To regain control, you need to unplug the boat's battery connector, wait for 10 seconds, then reinsert the battery to power it on and pair it with the remote control. Only then can you control the fast boat again.

Remote control low voltage prompt:

When the battery level of the remote control is close to low, the status indicator light (red light) of the remote control slowly flashes, reminding you to replace the remote control battery in a timely manner to avoid losing control of the speedboat and unable to return during play due to the low battery of the remote control.

⚠ Warning

- ★Please follow the instructions or packaging instructions for correct installation and use. Some parts are assembled by adults, and the product must be used under adult supervision.
- ★The product contains small parts that may pose a risk of ingestion or suffocation.
- ★Please handle the packaging materials properly to avoid accidental injury to children.
- ★The protective film on the color box is only used for transportation and protection. Please remove it yourself before sales and use, and handle it properly. Do not let children come into contact with it.
- ★Please maintain a safe distance from high-speed rotating propellers to avoid danger.
- ★Batteries and motors are heating components, please do not touch them to avoid the risk of burns.
- ★Warning instructions for radio remote control models: ① To ensure the electromagnetic environment requirements of aviation radio stations, it is prohibited to use various model remote controls in an area with a radius of 5000 meters and the center point of the airport runway as the center point. ② During the period when relevant national departments issue radio control orders and within the region, the use of model remote controllers should be stopped as required.
- ★Laser radiation, do not shoot directly at the beam.
- ★It is strictly prohibited to play in deep water to avoid accidents.
- ★The model can only be connected to Class II electrical safety equipment.
- ★The product must be fully installed according to the instructions before it can be used in water.
- ★This model is not a life saving device.
- ★The charger, battery box, and battery should be inserted into the designated power source that matches the product logo.
- ★Only original factory configured chargers can be used.
- ★A charger is not a toy.
- ★Non rechargeable batteries are not rechargeable.
- ★When charging the battery, adult supervision is required.
- ★Do not mix old and new batteries or batteries of different types.
- ★Exhausted batteries should be promptly removed.
- ★If not used for a long time, please remove the battery.
- ★Before cleaning the model, it should be disconnected from the battery and charger.
- ★Regularly inspect the charger, wires, plugs, housing, and other components. If any damage is found, stop using immediately until it is fully repaired.
- ★When installing or replacing the battery, install it with the correct polarity.
- ★The wiring terminals should not be short circuited.
- ★The remote control uses 1.5V * 2 AA batteries, and the speedboat uses 7.4V lithium-ion rechargeable battery pack.
- ★Do not short circuit, disassemble, or put the battery into fire.
- ★This packaging and manual contain important product information, please keep them.

Diagram of Sales parts

HJ826-001 Lithium Battery 1300mAh 	HJ826-002 USB Charger 	HJ826-003 Motor (Bare motor) 
HJ826-004 826A Receiving board (Bare board) 	HJ826-005 826A Receiving board assembly 	HJ826-006 826A Lamp component 
HJ826-007 826B Receiving board (Bare board) 	HJ826-008 826B Receiving board assembly 	HJ826-009 826B Lamp component 
HJ826-010 Left and right Water jet + Rudder 	HJ826-011 Coupling + Shaft 	HJ826-012 Axial copper sleeve + 0 ring 
HJ826-013 Silicone water pipe 	HJ826-014 Hull bottom 	HJ826-015 826 Top cover + Waterproof sealing ring 
HJ826-016 826 Red hull + Spring buckle 	HJ826-017 826 Blue hull + Spring buckle 	HJ826-018 826 Green hull + Spring buckle 
HJ828-001 828 Red top cover + Waterproof sealing ring 	HJ828-002 828 Blue top cover + Waterproof sealing ring 	HJ828-003 828 Red hull + Spring buckle 
HJ828-004 828 Blue hull + Spring buckle 	HJ819-006 Copper nut 	HJ819-007 Left / Right Propeller assembly 
HJ825-002 Remote Control 		